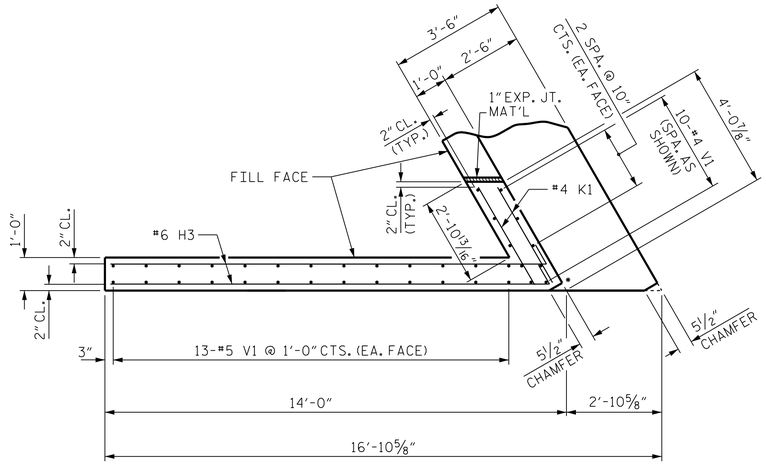

PLAN OF WING (W3)

✳ FIELD CUT #4 K1 AS NECESSARY TO PROVIDE A 2" MIN. CLEARANCE TO CHAMFER.

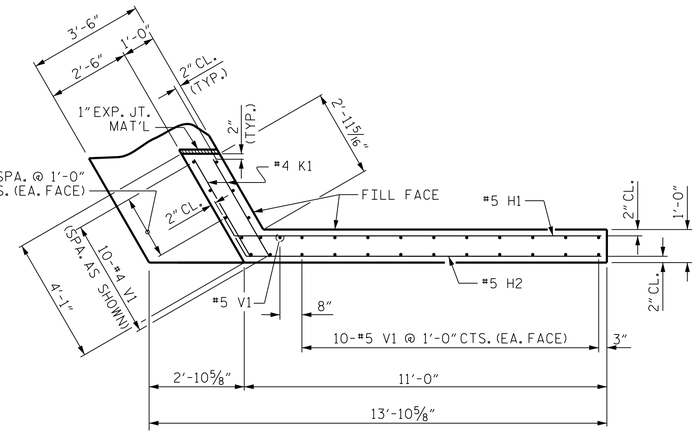

PLAN OF WING (W4)

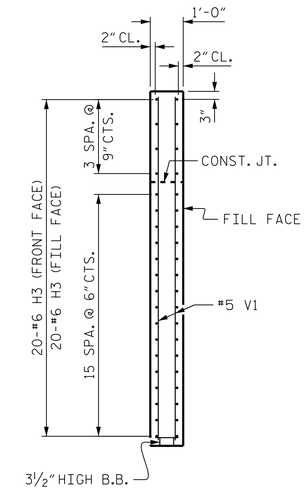

SECTION X-X

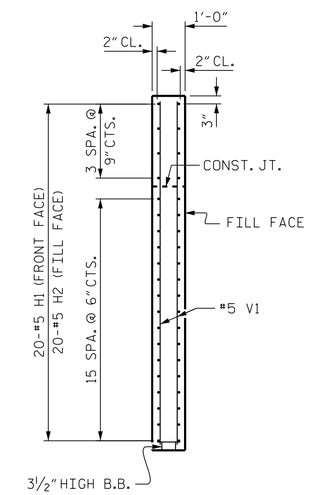

SECTION Y-Y

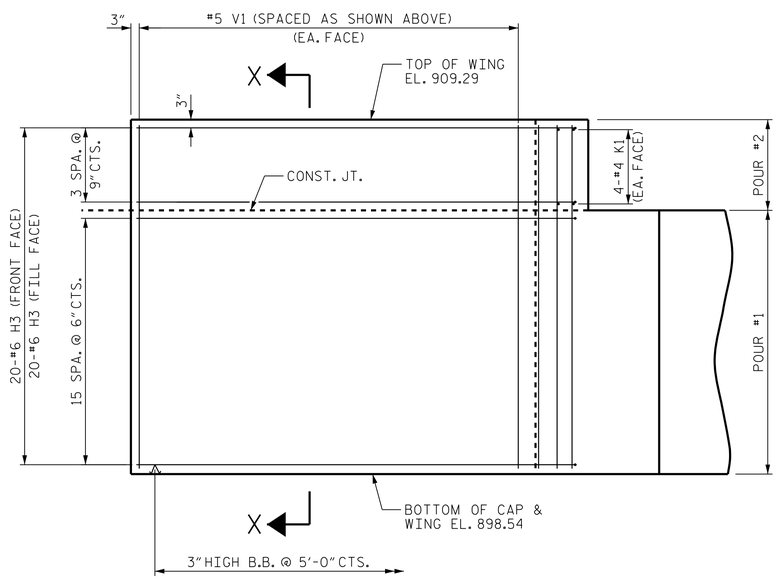

ELEVATION OF WING (W3)

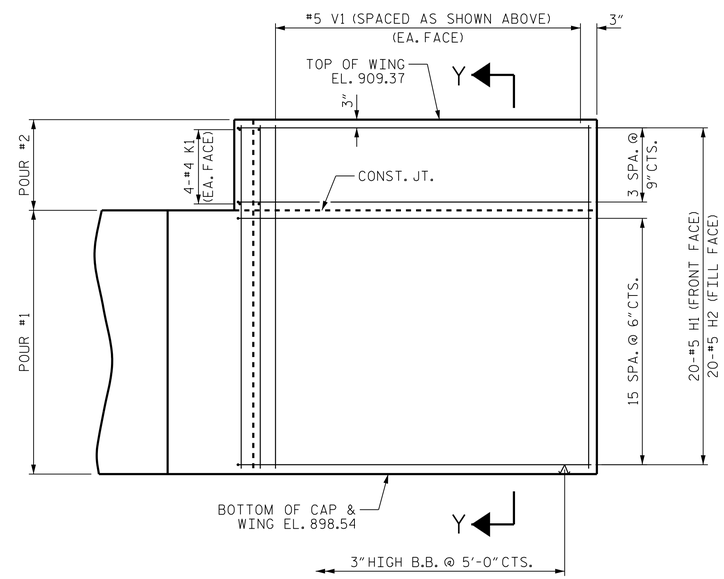

ELEVATION OF WING (W4)

PROJECT NO. B-4979
YADKIN COUNTY
STATION: 15+55.00 -L-

SHEET 2 OF 3

STATE OF NORTH CAROLINA
DEPARTMENT OF TRANSPORTATION
RALEIGH

SUBSTRUCTURE

END BENT 2

DOCUMENT NOT CONSIDERED FINAL UNLESS ALL SIGNATURES COMPLETED

CDM Smith
CDM SMITH
5400 Glenwood Avenue, Suite 400
Raleigh, NC 27612-3228
NC COA No. F-1255

DRAWN BY : VDK DATE : 4/18
CHECKED BY : THF DATE : 4/18
DESIGN ENGINEER : VDK DATE : 4/18

DWG. No.

NORTH CAROLINA PROFESSIONAL SEAL 16301 ENGINEER TING-HSIUNG FANG
Ting Fang
DOCUSIGNED BY:
A0E4570BDE60462...
1/15/2019

REVISIONS						SHEET NO.
NO.	BY:	DATE:	NO.	BY:	DATE:	S-20
1			3			TOTAL SHEETS
2			4			23

FILE: c:\pw_pll\langth\d0949683\401_039_B4979_SAU_E22_020.dgn
DATE: 1/15/2019 9:04:07 PM