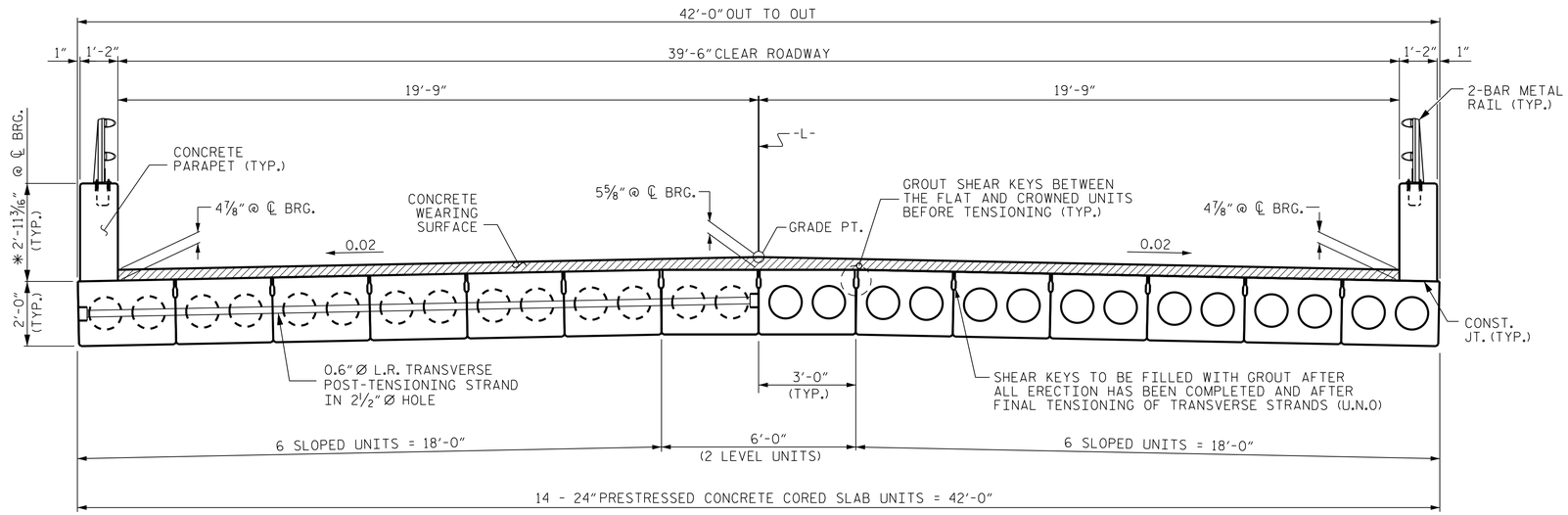

HALF SECTION
AT INTERMEDIATE DIAPHRAGMS

HALF SECTION
THROUGH VOIDS

TYPICAL SECTION

* - THE MAXIMUM PARAPET HEIGHT AND CONCRETE WEARING SURFACE THICKNESS ARE SHOWN. THE HEIGHT OF THE PARAPET AND CONCRETE WEARING SURFACE THICKNESS VARIES WHILE THE TOP OF THE PARAPET FOLLOWS THE PROFILE OF THE GUTTERLINE. FOR PARAPET HEIGHT DETAILS AND CONCRETE WEARING SURFACE THICKNESS SEE SHEET S-12 & S-08.

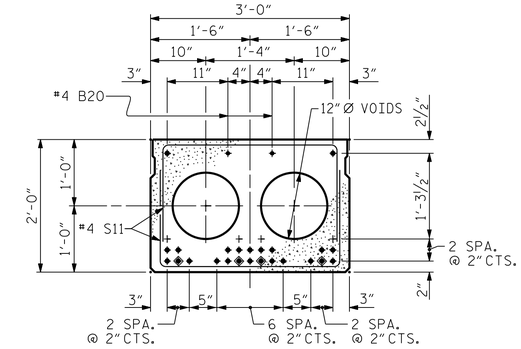

INTERIOR SLAB SECTION
(24 STRANDS REQUIRED)

0.6" Ø LOW RELAXATION STRAND LAYOUT

◈ BOND SHALL BE BROKEN ON THESE STRANDS FOR A DISTANCE OF 12'-0" FROM END OF CORED SLAB UNIT. SEE STANDARD SPECIFICATIONS, ARTICLE 1078-7.

DEBONDING LEGEND

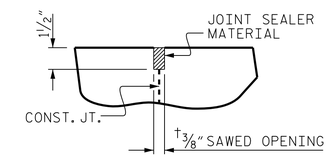

DETAIL "A"

A 1½" DEEP CONTRACTION JOINT AT EACH END BENT SHALL BE SAWED NO MORE THAN 12 HOURS AFTER THE APPROACH SLAB IS CAST. THE JOINT SHALL BE CLEANED OF ALL DEBRIS BEFORE THE SEALANT IS APPLIED. THE JOINT SEALER MATERIAL SHALL CONFORM TO THE REQUIREMENTS OF SECTION 1028-3 OF THE STANDARD SPECIFICATIONS.

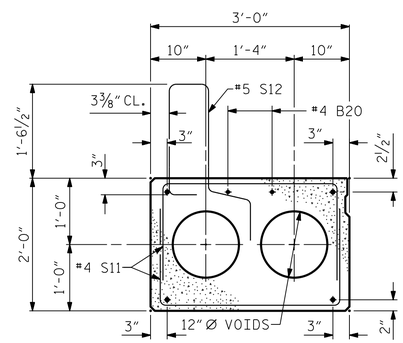

EXTERIOR SLAB SECTION
(FOR PRESTRESSED STRAND LAYOUT, SEE INTERIOR SLAB SECTION.)

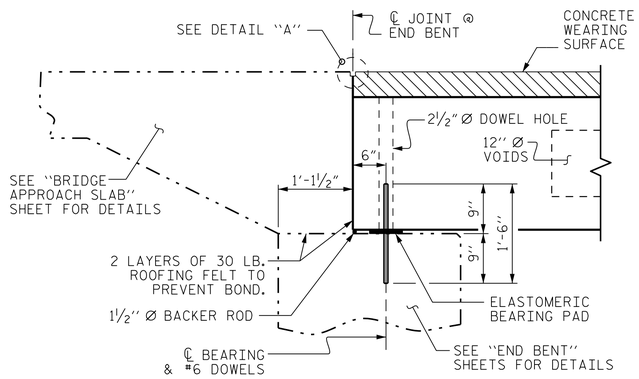

SECTION AT END BENT

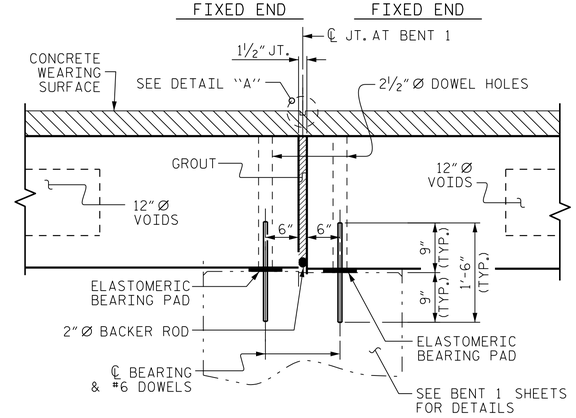

SECTION AT BENT 1

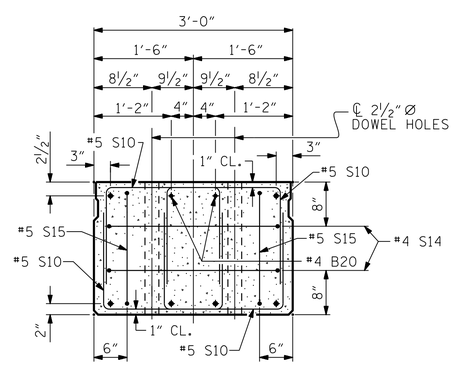

END ELEVATION

SHOWING PLACEMENT OF DOUBLE STIRRUPS AND LOCATION OF DOWEL HOLES. (STRAND LAYOUT NOT SHOWN.) INTERIOR SLAB UNIT SHOWN-EXTERIOR SLAB UNIT SIMILAR EXCEPT SHEAR KEY LOCATION.

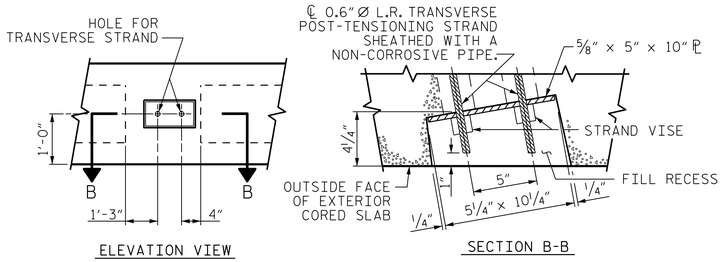

GROUTED RECESS AT END OF POST-TENSIONED STRAND CORED SLABS

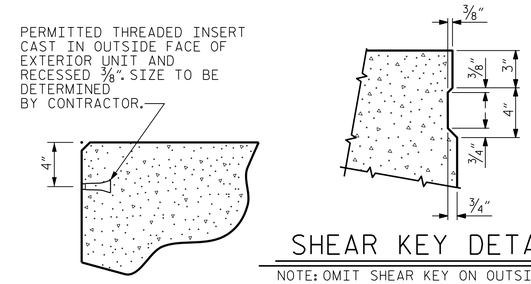

SHEAR KEY DETAIL

NOTE: OMIT SHEAR KEY ON OUTSIDE FACE OF EXTERIOR CORED SLABS.

PROJECT NO. B-4979
YADKIN COUNTY
STATION: 15+55.00 -L-

SHEET 1 OF 3

STATE OF NORTH CAROLINA
DEPARTMENT OF TRANSPORTATION
RALEIGH

3'-0" X 2'-0" PRESTRESSED CONCRETE CORED SLAB UNIT 60° SKEW SPANS A & B

DOCUMENT NOT CONSIDERED FINAL UNLESS ALL SIGNATURES COMPLETED

CDM Smith
CDM SMITH
5400 Glenwood Avenue, Suite 400
Raleigh, NC 27612-3228
NC COA No. F-1255

DRAWN BY : VDK DATE : 4/18
CHECKED BY : THF DATE : 4/18
DESIGN ENGINEER : VDK DATE : 4/18

DWG. No.

NORTH CAROLINA PROFESSIONAL SEAL 16301 ENGINEER TING-HSIUNG FANG
Ting Fang
DocuSigned by: 6DE42C0A5A60462...
10/2/2018

REVISIONS							SHEET NO.
NO.	BY:	DATE:	NO.	BY:	DATE:		S-05
1			3				TOTAL SHEETS
2			4				23

FILE: c:\pw_pll\langth\d0949683\401_009_B4979_SAU_CS1_005.dgn
DATE: 9/28/2018 8:42:18 AM