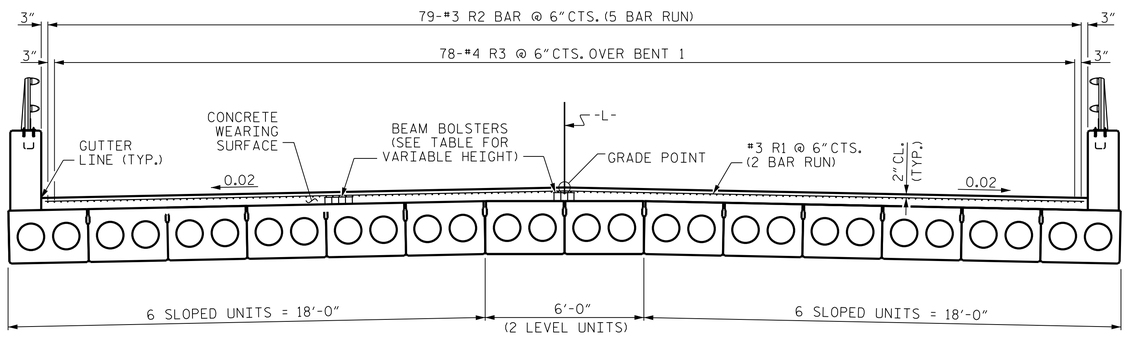

REINFORCING FOR CONCRETE WEARING SURFACE

BEAM AND SLAB BOLSTER HEIGHTS BASED ON PREDICTED FINAL CAMBER AND THEORETICAL GRADE LINE ELEVATION AND VARY BETWEEN ℄ BEARING AND MID-SPAN.

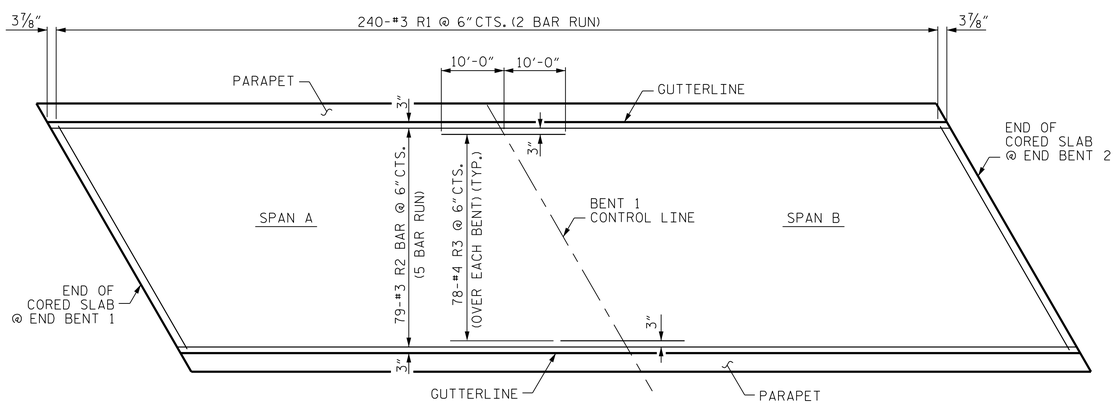

PLAN

SHOWING CONTINUOUS CONCRETE OVERLAY OVER BENT 1

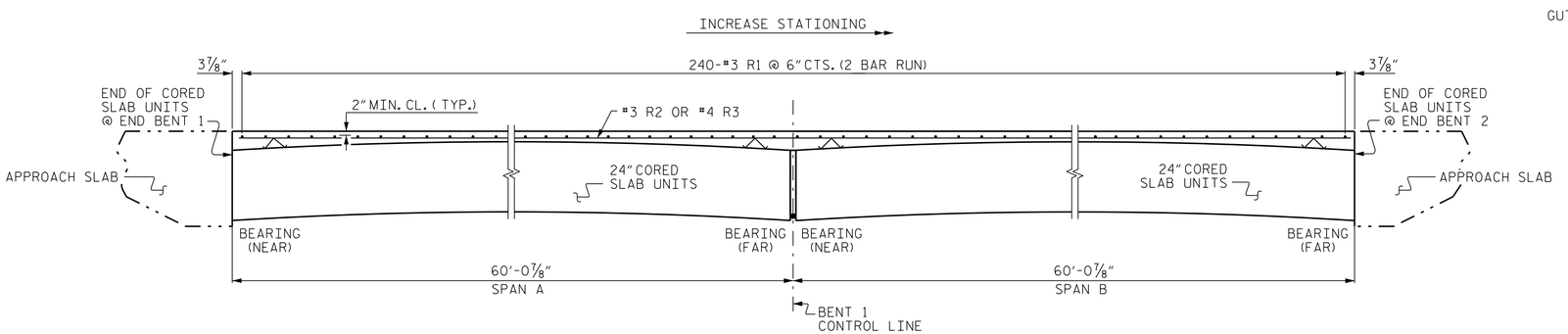

ELEVATION

NOTES:

PLACEMENT OF THE CONCRETE WEARING SURFACE SHALL OCCUR AFTER CASTING THE PARAPETS. THE COST OF THE REINFORCING STEEL CAST WITH THE CONCRETE WEARING SURFACE SHALL BE INCLUDED IN THE UNIT PRICE BID FOR CONCRETE WEARING SURFACE. FOR CONCRETE WEARING SURFACE, SEE SPECIAL PROVISIONS.

THE TOP SURFACE OF THE CORED SLAB UNITS SHALL HAVE A ⅜" RAKED FINISH IN ACCORDANCE WITH SECTION 1078-15 OF THE STANDARD SPECIFICATIONS.

GROOVED CONTRACTION JOINTS, ½" IN DEPTH, SHALL BE TOOLED IN THE TOP OF WEARING SURFACE AT INTERIOR BENT WITH CONTINUOUS CONCRETE WEARING SURFACE IN ACCORDANCE WITH ARTICLE 825-10(B) OF THE STANDARD SPECIFICATIONS.

ALL REINFORCING STEEL FOR THE CONCRETE WEARING SURFACE SHALL BE EPOXY COATED.

BILL OF MATERIAL

CONCRETE WEARING SURFACE

BAR	NO.	SIZE	TYPE	LENGTH	WEIGHT
✳ R1	480	#3	STR	23'-3"	4196
✳ R2	395	#3	STR	25'-0"	3713
✳ R3	78	#4	STR	20'-0"	1042
✳ EPOXY COATED REINFORCING STEEL					8,951 LBS
CONCRETE WEARING SURFACE					4,746 SQ. FT.
GROOVING AREA					4,361 SQ. FT.

BEAM BOLSTER HEIGHT

FOR ENTIRE DECK EXCEPT ALONG GRADE POINT

SPAN	AT ℄ BRG. (NEAR)	AT MID-SPAN	AT ℄ BRG. (FAR)
A	2"	¼" ✳✳	1¾"
B	1¾"	¼" ✳✳	2"

ALONG GRADE POINT

SPAN	AT ℄ BRG. (NEAR)	AT MID-SPAN	AT ℄ BRG. (FAR)
A	2¾"	1¼"	2½"
B	2½"	1¼"	2¾"

✳✳ USE SLAB BOLSTER
BEAM AND SLAB BOLSTERS SHALL BE SPACED AT 2'-0" CENTERS.

CONCRETE WEARING SURFACE THICKNESS

INCREASE STATIONING

SPAN	LOCATION	LEFT GUTTERLINE	G. P.	RIGHT GUTTERLINE
A	BEARING (NEAR)	4⅞"	5⅝"	4⅞"
	MID-SPAN	3½"	4¼"	3½"
	BEARING (FAR)	4⅞"	5⅝"	4⅞"
B	BEARING (NEAR)	4⅞"	5⅝"	4⅞"
	MID-SPAN	3½"	4¼"	3½"
	BEARING (FAR)	4⅞"	5⅝"	4⅞"

SPLICE LENGTH CHART

BAR SIZE	EPOXY COATED
#3	1'-3"

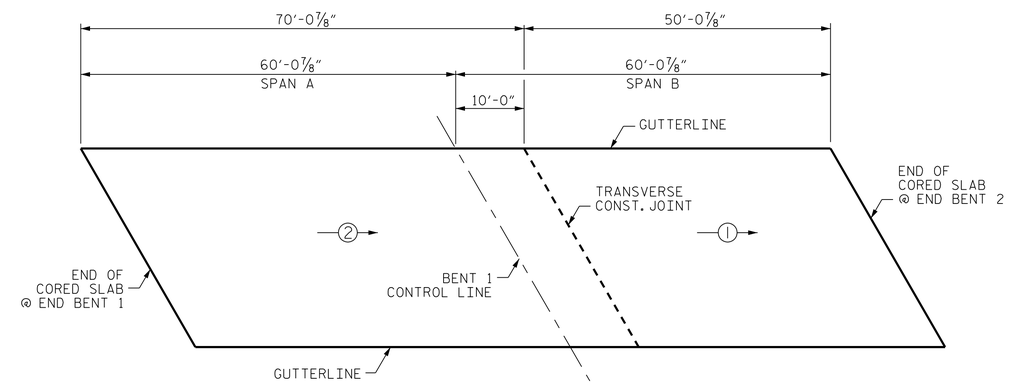

POURING SEQUENCE

(#) = INDICATES POUR NUMBER AND DIRECTION OF POUR

PROJECT NO. B-4979
YADKIN COUNTY
STATION: 15+55.00 -L-

DOCUMENT NOT CONSIDERED FINAL UNLESS ALL SIGNATURES COMPLETED

CDM Smith
CDM SMITH
5400 Glenwood Avenue, Suite 400
Raleigh, NC 27612-3228
NC COA No. F-1255

DRAWN BY : VDK DATE : 4/18
CHECKED BY : THF DATE : 4/18
DESIGN ENGINEER : VDK DATE : 4/18

DWG. No.

NORTH CAROLINA PROFESSIONAL SEAL 16301 ENGINEER TING HSIUNG FANG
DocuSigned by: Ting Fang
10/2/2018

STATE OF NORTH CAROLINA
DEPARTMENT OF TRANSPORTATION
RALEIGH

SUPERSTRUCTURE

CONCRETE WEARING SURFACE DETAILS

REVISIONS						
NO.	BY:	DATE:	NO.	BY:	DATE:	
1			3			
2			4			

SHEET NO. S-08
TOTAL SHEETS 23

FILE: c:\pw_pll\length\d0949683\d01_015_B4979_SMU_CWS_008.dgn
DATE: 10/1/2018 10:31:21 PM