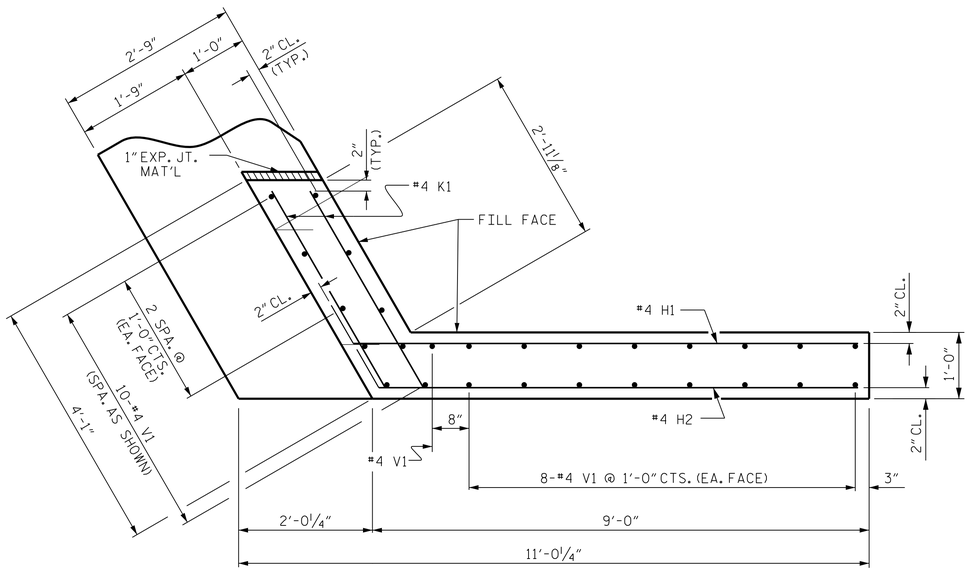

PLAN OF WING (W1)

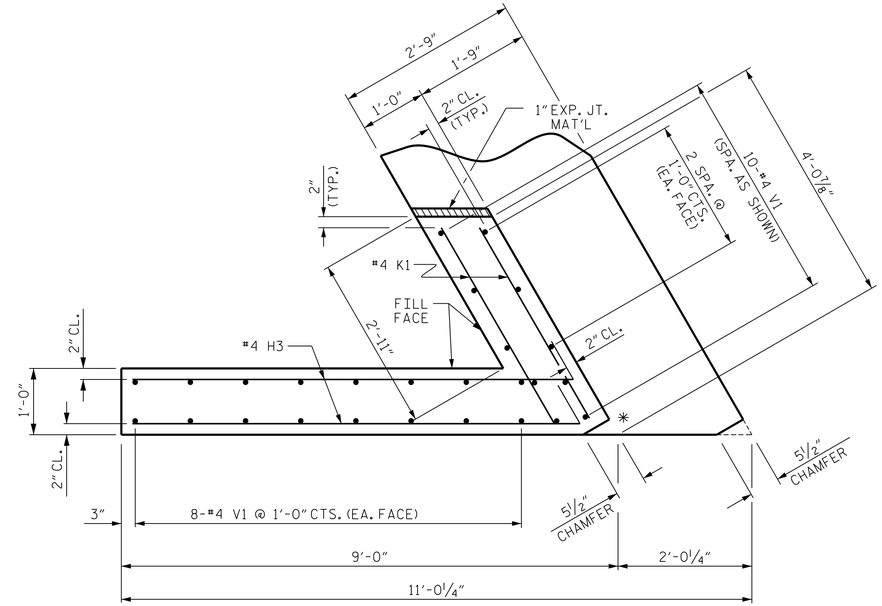

PLAN OF WING (W2)

* FIELD CUT #4 K1 AS NECESSARY TO PROVIDE A 2" MIN. CLEARANCE TO CHAMFER.

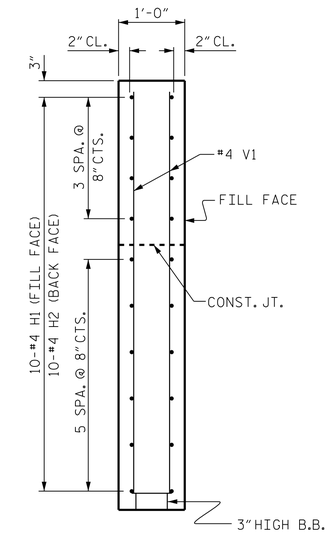

SECTION X-X

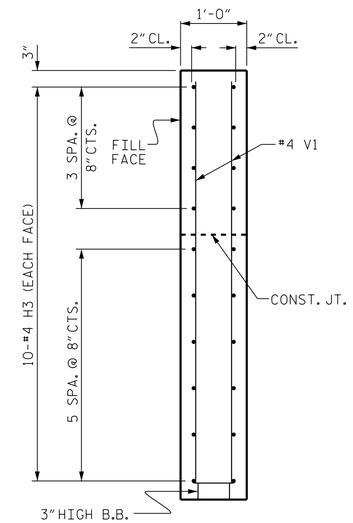

SECTION Y-Y

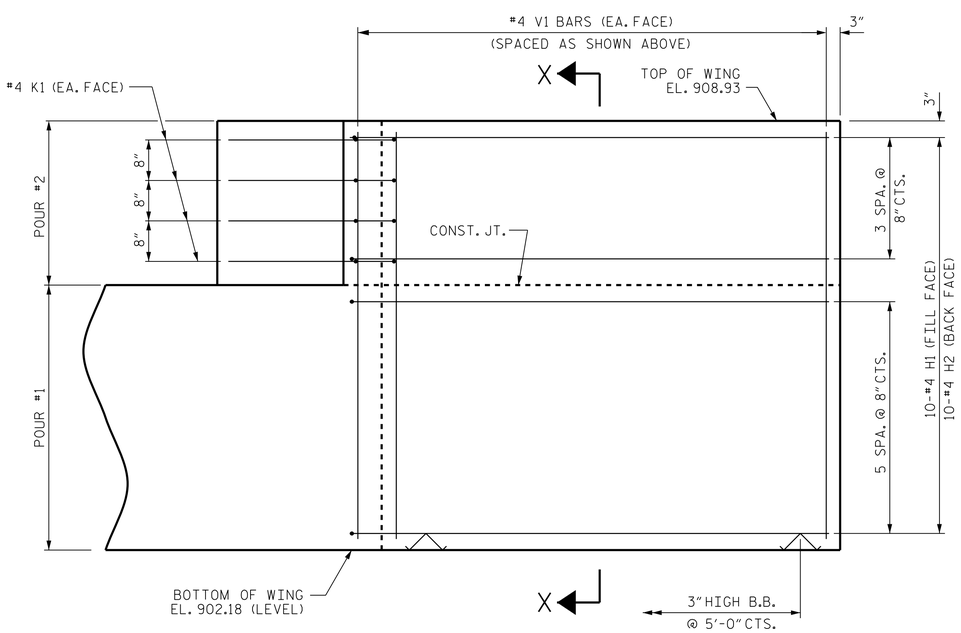

ELEVATION OF WING (W1)

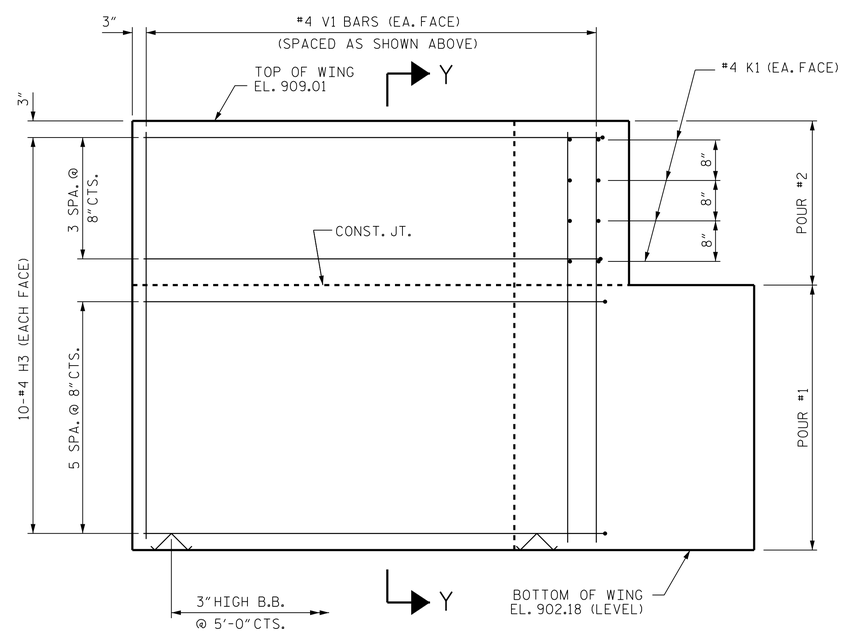

ELEVATION OF WING (W2)

WING DETAILS

PROJECT NO. B-4979

YADKIN COUNTY

STATION: 15+55.00 -L-

SHEET 2 OF 3

DOCUMENT NOT CONSIDERED FINAL UNLESS ALL SIGNATURES COMPLETED

CDM Smith

CDM SMITH
5400 Glenwood Avenue, Suite 400
Raleigh, NC 27612-3228
NC COA No. F-1255

DRAWN BY :	VDK	DATE :	4/18
CHECKED BY :	THF	DATE :	4/18
DESIGN ENGINEER :	VDK	DATE :	4/18

DWG. No.

NORTH CAROLINA PROFESSIONAL SEAL 16301 ENGINEER TING-HSIUNG FANG

Ting Fang
6DE43C0AEA80482...
10/2/2018

STATE OF NORTH CAROLINA
DEPARTMENT OF TRANSPORTATION
RALEIGH

SUBSTRUCTURE

END BENT 1
WING DETAILS

REVISIONS								SHEET NO.
NO.	BY:	DATE:	NO.	BY:	DATE:			S-15
1			3					TOTAL SHEETS
2			4					23

FILE: c:\pw_pll\langth\d0949683\d01_029_B4979_SMU_E12_015.dgn
DATE: 9/28/2018 8:43:33 AM