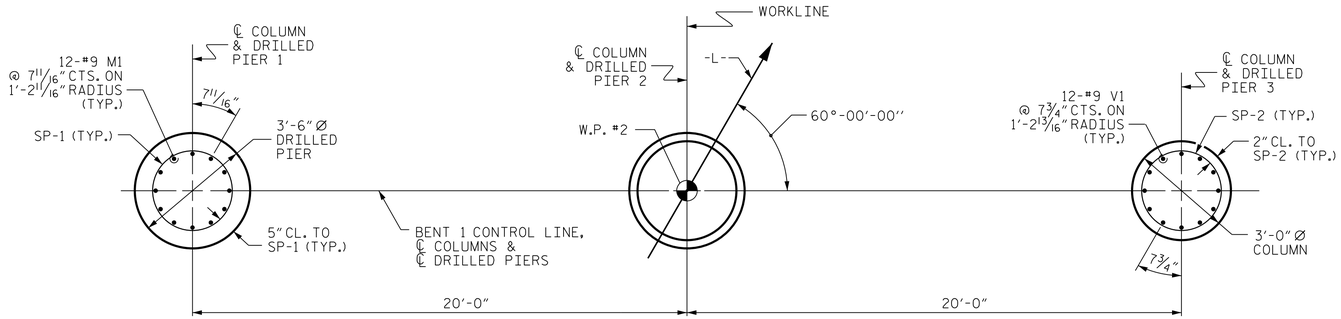

PLAN OF DRILLED PIERS & COLUMNS

REINFORCING STEEL & DIMENSIONS ARE TYPICAL FOR EACH COLUMN & DRILLED PIER

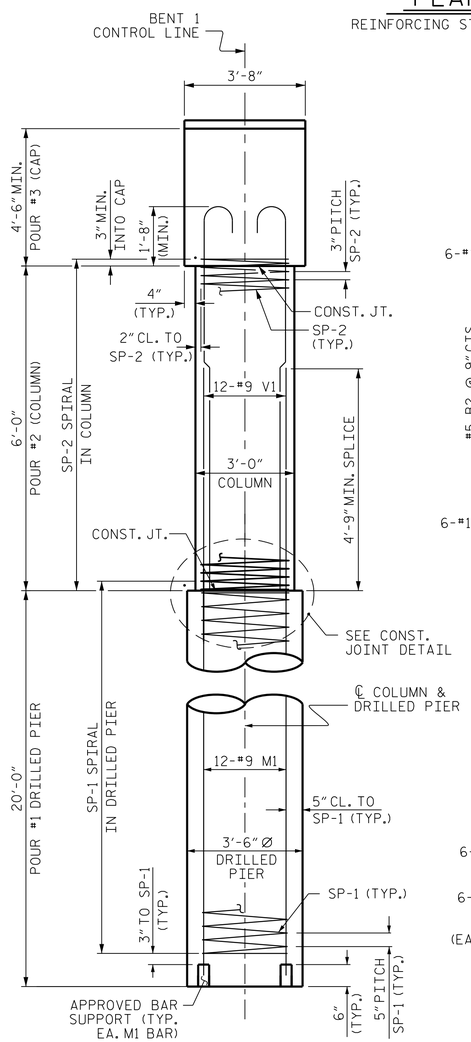

END ELEVATION

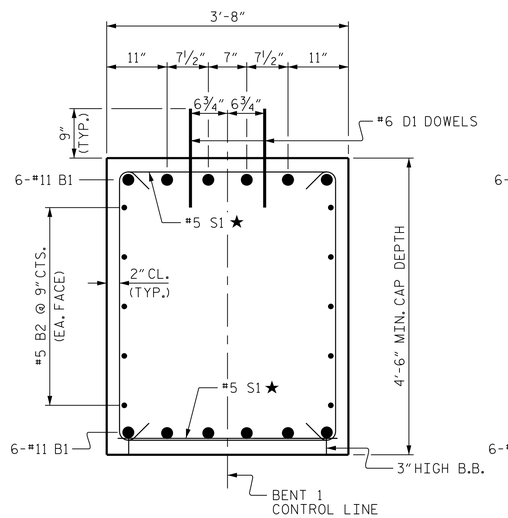

SECTION A-A

★ INVERT ALTERNATE STIRRUPS

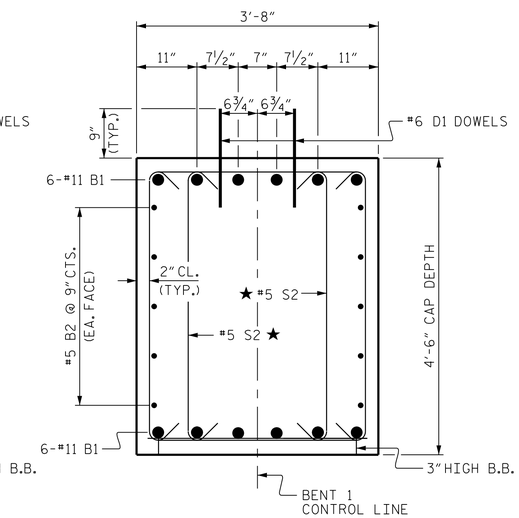

SECTION C-C

★ INVERT ALTERNATE STIRRUPS

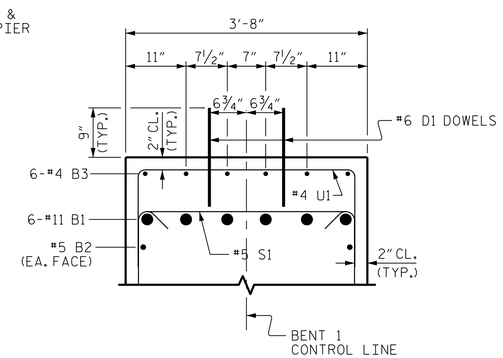

SECTION B-B

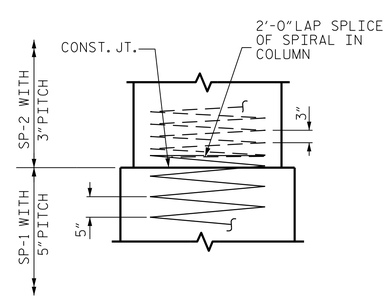

CONSTRUCTION JOINT DETAIL

BAR TYPES

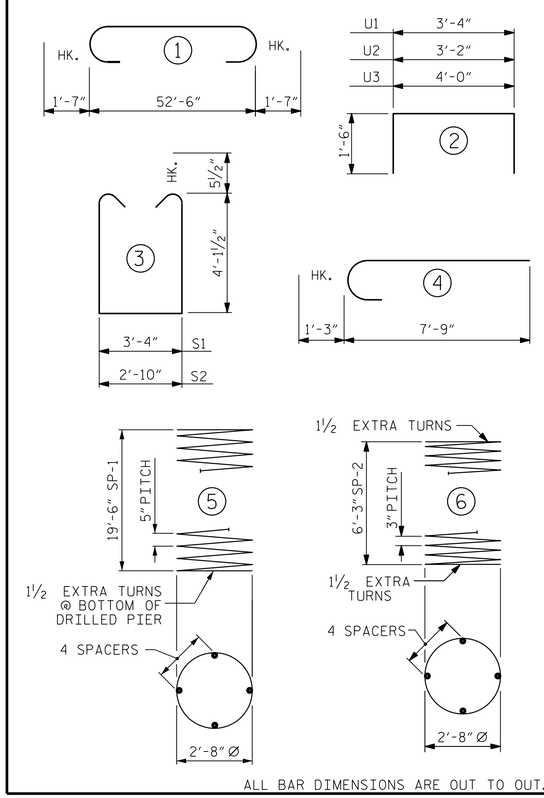

ALL BAR DIMENSIONS ARE OUT TO OUT.

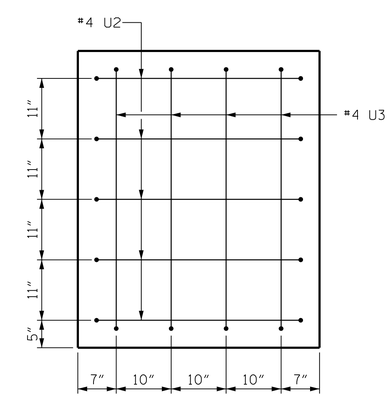

END OF CAP VIEW

(TYP. EA. END)

BILL OF MATERIAL

BENT 1

BAR	NO.	SIZE	TYPE	LENGTH	WEIGHT
B1	12	#11	1	55'-8"	3549
B2	10	#5	STR	52'-8"	549
B3	6	#4	STR	26'-6"	106
D1	56	#6	STR	1'-6"	126
M1	36	#9	STR	27'-6"	3366
V1	36	#9	4	9'-0"	1102
S1	68	#5	3	12'-6"	887
S2	40	#5	3	12'-0"	501
U1	18	#4	2	6'-4"	76
U2	10	#4	2	6'-2"	41
U3	8	#4	2	7'-0"	37
REINFORCING STEEL					10,340 LBS.
SP-1	3	✳	5	402'-3"	1,258
SP-2	3	✳✳	6	224'-4"	450
SPIRAL COLUMN REINFORCING STEEL					1,708 LBS.

✳ THE SP-1 SPIRAL REINFORCING STEEL SHALL BE W31 OR D-31 COLD DRAWN WIRE OR #5 PLAIN OR DEFORMED BAR

✳✳ THE SP-2 SPIRAL COLUMN REINFORCING STEEL SHALL BE W20 OR D-20 COLD DRAWN WIRE OR #4 PLAIN OR DEFORMED BAR

CLASS A CONCRETE BREAKDOWN	
POUR #2 (COLUMNS)	4.7 C.Y.
POUR #3 (CAP)	33.6 C.Y.
TOTAL CLASS A CONCRETE	38.3 C.Y.

DRILLED PIERS:

DRILLED PIER CONCRETE	
POUR #1 (DRILLED PIERS)	21.4 C.Y.
3'-6" Ø DRILLED PIER NOT IN SOIL	33.0 LIN. FT.
3'-6" Ø DRILLED PIER IN SOIL	27.0 LIN. FT.
PERMANENT STEEL CASING FOR 3'-6" Ø DRILLED PIER	27.0 LIN. FT.
CSL TUBES	258.0 LIN. FT.

PROJECT NO. B-4979

YADKIN COUNTY

STATION: 15+55.00 -L-

SHEET 2 OF 2

STATE OF NORTH CAROLINA
DEPARTMENT OF TRANSPORTATION
RALEIGH

SUBSTRUCTURE

BENT 1

DOCUMENT NOT CONSIDERED FINAL UNLESS ALL SIGNATURES COMPLETED

CDM Smith

CDM SMITH
5400 Glenwood Avenue, Suite 400
Raleigh, NC 27612-3228
NC COA No. F-1255

DRAWN BY :	VDK	DATE :	4/18
CHECKED BY :	THF	DATE :	4/18
DESIGN ENGINEER :	VDK	DATE :	4/18

DWG. No.

NORTH CAROLINA PROFESSIONAL SEAL 16301 ENGINEER TING HSIUNG FANG

Ting Fang
10/2/2018

REVISIONS						
NO.	BY:	DATE:	NO.	BY:	DATE:	
1			3			
2			4			

SHEET NO. S-18

TOTAL SHEETS 23

FILE: c:\pw_pll\length\d0949683\401_035_B4979_SMU_B2_018.dgn
DATE: 9/28/2018 8:42:55 AM