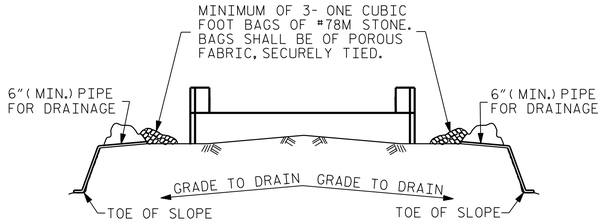

BAGGED STONE AND PIPE SHALL BE PLACED IMMEDIATELY AFTER COMPLETION OF END BENT EXCAVATION. PIPE MAY BE EITHER CONCRETE, CORRUGATED STEEL, CORRUGATED ALUMINUM ALLOY, OR CORRUGATED PLASTIC. PERFORATED PIPE WILL NOT BE ALLOWED.

BAGGED STONE SHALL REMAIN IN PLACE UNTIL THE ENGINEER DIRECTS THAT IT BE REMOVED. THE CONTRACTOR SHALL REMOVE AND DISPOSE OF SILT ACCUMULATIONS AT BAGGED STONE WHEN SO DIRECTED BY THE ENGINEER. BAGS SHALL BE REMOVED AND REPLACED WHENEVER THE ENGINEER DETERMINES THAT THEY HAVE DETERIORATED AND LOST THEIR EFFECTIVENESS.

NO SEPARATE PAYMENT WILL BE MADE FOR THIS WORK AND THE ENTIRE COST OF THIS WORK SHALL BE INCLUDED IN THE UNIT CONTRACT PRICE BID FOR THE SEVERAL PAY ITEMS.

TEMPORARY DRAINAGE AT END BENT

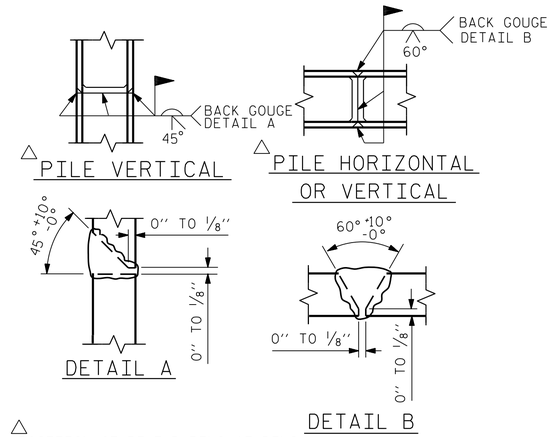

△ POSITION OF PILE DURING WELDING.

PILE SPLICE DETAILS

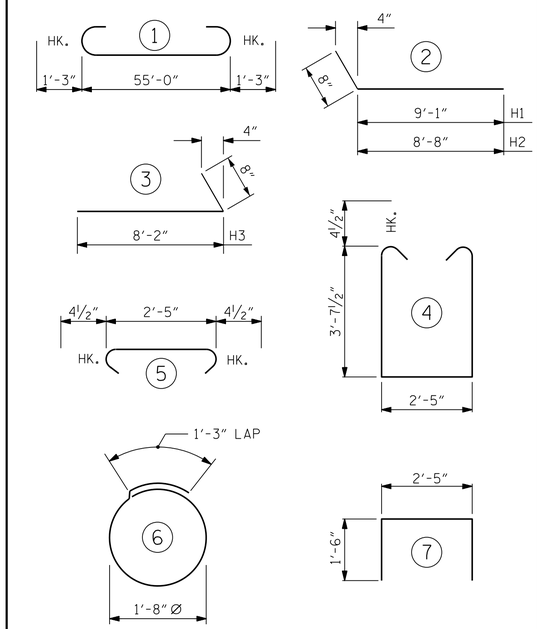

ALL BAR DIMENSIONS ARE OUT TO OUT

BAR TYPES

BILL OF MATERIAL

END BENT 1

BAR	NO.	SIZE	TYPE	LENGTH	WEIGHT
B1	8	#9	1	57'-6"	1564
B2	28	#4	STR	28'-10"	539
B3	14	#4	STR	2'-5"	23
B4	4	#4	STR	29'-6"	79
D1	28	#6	STR	1'-6"	63
H1	10	#4	2	9'-9"	65
H2	10	#4	2	9'-4"	62
H3	20	#4	3	8'-10"	118
K1	16	#4	STR	3'-8"	39
S1	93	#4	4	10'-5"	647
S2	93	#4	5	3'-2"	197
S3	32	#4	6	6'-6"	139
U1	20	#4	7	5'-5"	72
V1	53	#4	STR	6'-5"	227

REINFORCING STEEL 3,834 LBS.

CLASS A CONCRETE BREAKDOWN

POUR #1	CAP, LOWER PART OF WINGS & COLLARS	27.7 C.Y.
POUR #2	UPPER PART OF WINGS	2.4 C.Y.
TOTAL CLASS A CONCRETE		30.1 C.Y.

HP 12 X 53 STEEL PILES
NO: 8 LIN. FT.= 160

PILE DRIVING EQUIPMENT SETUP FOR HP 12X53 STEEL PILES NO: 8

STEEL PILE POINTS NO: 8

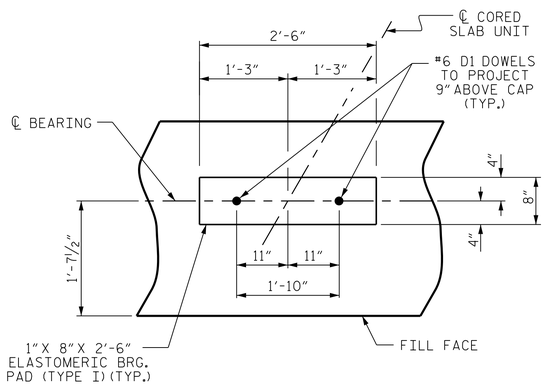

DETAIL "A"

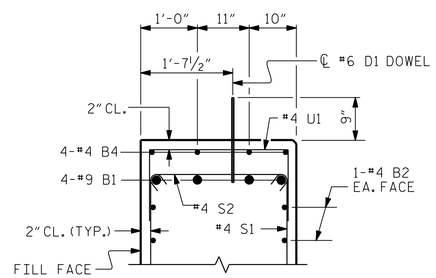

SECTION B-B

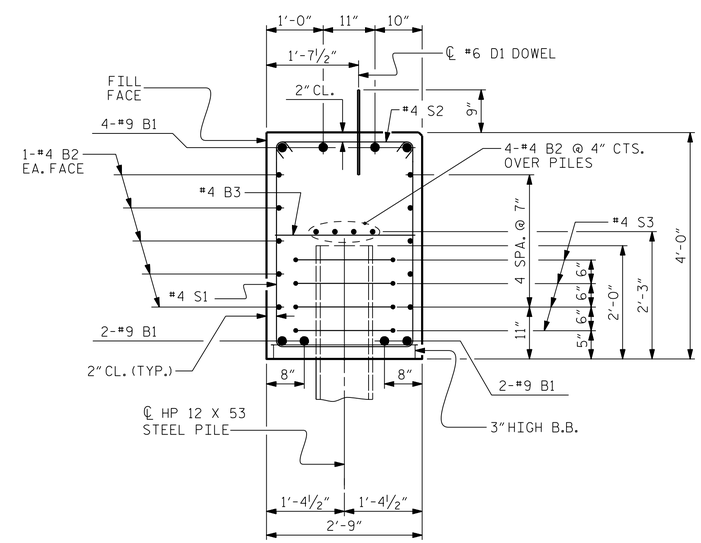

SECTION A-A

(CONCRETE COLLAR NOT SHOWN FOR CLARITY. SEE "CORROSION PROTECTION FOR STEEL PILES DETAIL.")

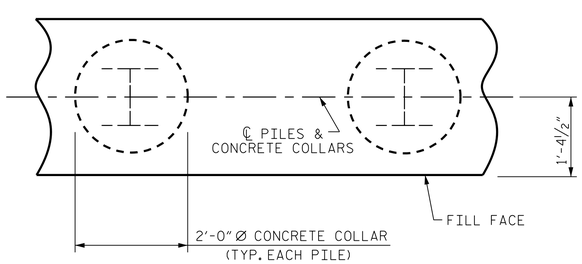

PLAN

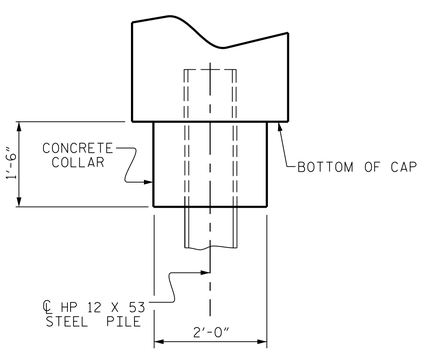

ELEVATION

CORROSION PROTECTION FOR STEEL PILES DETAIL

PROJECT NO. B-4979
YADKIN COUNTY
STATION: 15+55.00 -L-

SHEET 3 OF 3

STATE OF NORTH CAROLINA
DEPARTMENT OF TRANSPORTATION
RALEIGH

SUBSTRUCTURE

END BENT 1 DETAILS

DOCUMENT NOT CONSIDERED FINAL UNLESS ALL SIGNATURES COMPLETED

CDM Smith
CDM SMITH
5400 Glenwood Avenue, Suite 400
Raleigh, NC 27612-3228
NC COA No. F-1255

DRAWN BY : VDK DATE : 4/18
CHECKED BY : THF DATE : 4/18
DESIGN ENGINEER : VDK DATE : 4/18

DWG. No.

NORTH CAROLINA PROFESSIONAL SEAL 16301 ENGINEER TING HSIUNG FANG
Ting Fang
60E43C9AEA60462...

REVISIONS						SHEET NO.
NO.	BY:	DATE:	NO.	BY:	DATE:	S-16
1			3			TOTAL SHEETS
2			4			23

FILE: c:\pw_pll\length\d0949653\401_031_B4979_SMU_E13_016.dgn
DATE: 9/28/2018 8:43:40 AM