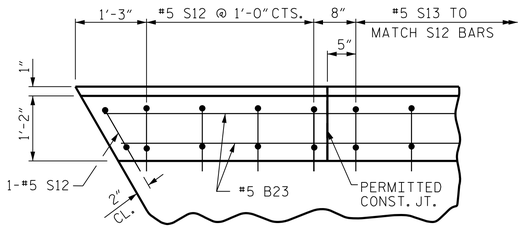

LEFT SIDE

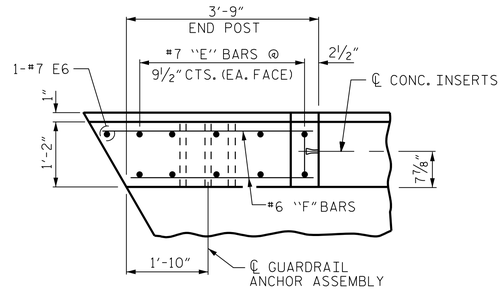

LEFT SIDE

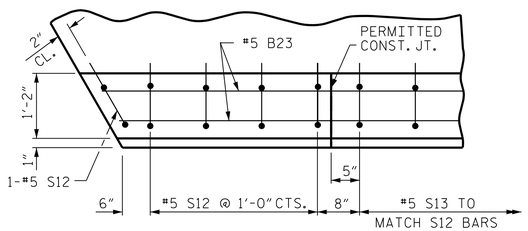

LEFT SIDE

PLAN OF PARAPET

END BENT 1 SHOWN, END BENT 2 SIMIALAR BY ROATATIONS

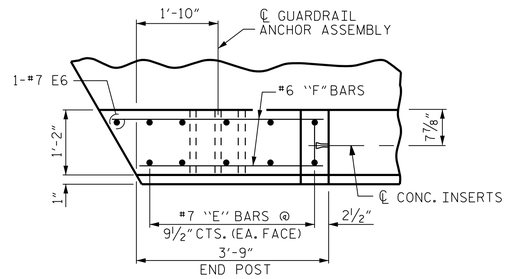

RIGHT SIDE

PLAN OF END POST

END BENT 1 SHOWN, END BENT 2 SIMIALAR BY ROATATIONS

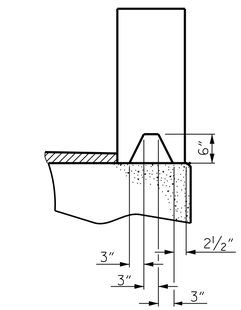

SECTION S-S

AT DAM IN OPEN JOINT
(THIS IS TO BE USED ONLY WHEN SLIP FORM IS USED)

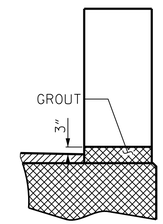

SECTION T-T

AT OPEN JOINT AT BENT
(THIS IS TO BE USED WHERE FOAM JOINT IS NOT USED)

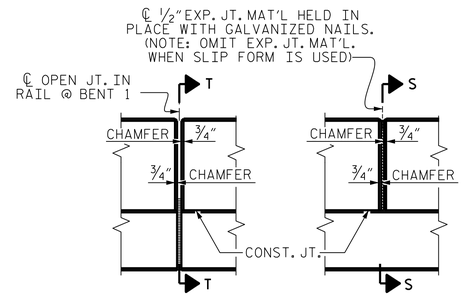

ELEVATION AT EXPANSION JOINTS

BAR TYPES

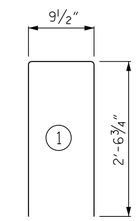

ALL BAR DIMENSIONS ARE OUT TO OUT

BILL OF MATERIAL

FOR 2 PARAPETS & 4 END POSTS

BAR	NO.	SIZE	TYPE	LENGTH	WEIGHT
✳B23	64	#5	STR	16'-11"	1129
✳E1	8	#7	STR	2'-9"	45
✳E2	8	#7	STR	3'-3"	53
✳E3	8	#7	STR	3'-9"	61
✳E4	8	#7	STR	4'-3"	69
✳E5	8	#7	STR	4'-8"	76
✳E6	4	#7	STR	2'-5"	20
✳F1	8	#6	STR	2'-0"	24
✳F2	4	#6	STR	3'-5"	21
✳F3	4	#6	STR	3'-9"	23
✳F4	4	#6	STR	3'-3"	20
✳F5	4	#6	STR	3'-7"	22
✳S13	224	#5	1	5'-11"	1382

✳EPOXY COATED REINFORCING STEEL	LBS.	2,945
CLASS AA CONCRETE	CU.YDS.	31.0
TOTAL LIN. FT. OF CONCRETE PARAPET		240.29

THE REINFORCING STEEL AND CONCRETE IN THE END POSTS ARE INCLUDED IN THE UNIT PRICE BID FOR THE CONCRETE PARAPET.

NOTES

ALL REINFORCING STEEL IN PARAPETS AND END POSTS SHALL BE EPOXY COATED.

GROOVED CONTRACTION JOINTS, ½" IN DEPTH, SHALL BE TOOLED IN ALL EXPOSED FACES OF THE PARAPET AND IN ACCORDANCE WITH ARTICLE 825-10(B) OF THE STANDARD SPECIFICATIONS. A CONTRACTION JOINT SHALL BE LOCATED AT EACH THIRD POINT BETWEEN PARAPET EXPANSION JOINTS. ONLY ONE CONTRACTION JOINT IS REQUIRED AT MIDPOINT OF PARAPET SEGMENTS LESS THAN 20 FEET IN LENGTH AND NO CONTRACTION JOINTS ARE REQUIRED FOR THOSE SEGMENTS LESS THAN 10 FEET IN LENGTH.

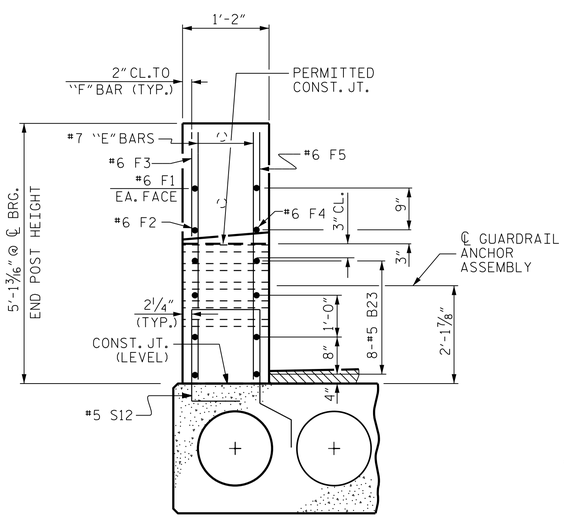

END VIEW

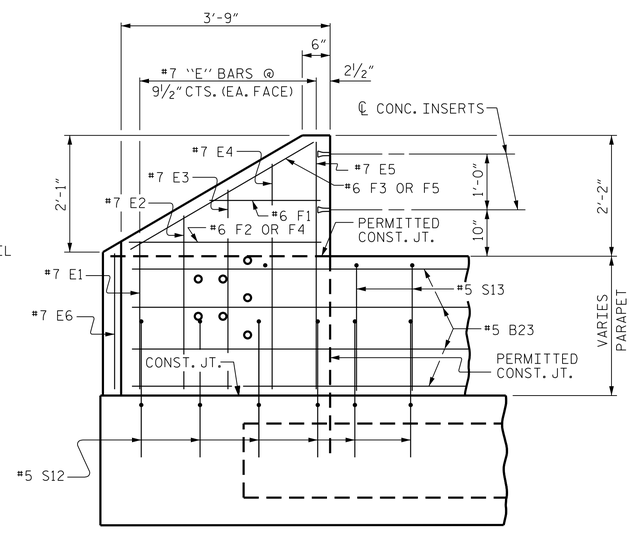

ELEVATION

PARAPET AND END POST FOR TWO BAR RAIL

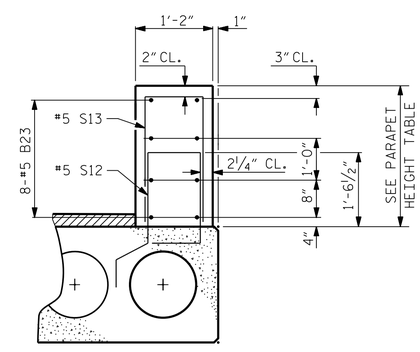

SECTION THRU PARAPET

FOR SPANS A & B

PARAPET HEIGHT TABLE		
	AT BEARING	AT MID-SPAN
SPAN A	2'-11 3/16"	2'-9 13/16"
SPAN B	2'-11 3/16"	2'-9 13/16"

CONCRETE PARAPET DETAILS

FOR PLAN VIEW OF CONCRETE PARAPET, SEE "PLAN OF SPAN" SHEET

PROJECT NO. B-4979
YADKIN COUNTY
STATION: 15+55.00 -L-

DOCUMENT NOT CONSIDERED FINAL UNLESS ALL SIGNATURES COMPLETED

CDM Smith
CDM SMITH
5400 Glenwood Avenue, Suite 400
Raleigh, NC 27612-3228
NC COA No. F-1255

DRAWN BY : VDK DATE : 4/18
CHECKED BY : THF DATE : 4/18
DESIGN ENGINEER : VDK DATE : 4/18

DWG. No.

NORTH CAROLINA PROFESSIONAL SEAL 16301 ENGINEER TING HSIUNG FANG
Ting Fang
60E43C9AEA60462...
10/2/2018

STATE OF NORTH CAROLINA
DEPARTMENT OF TRANSPORTATION
RALEIGH

1'-2" X 2'-11 3/16"
CONCRETE PARAPET AND END POSTS

REVISIONS								SHEET NO.
NO.	BY:	DATE:	NO.	BY:	DATE:			S-12
1			3					TOTAL SHEETS
2			4					23

FILE: c:\pw_pll\bingh\d0949683\d01_023_B4979_SMU_EP_012.dgn
DATE: 9/28/2018 8:42:10 AM