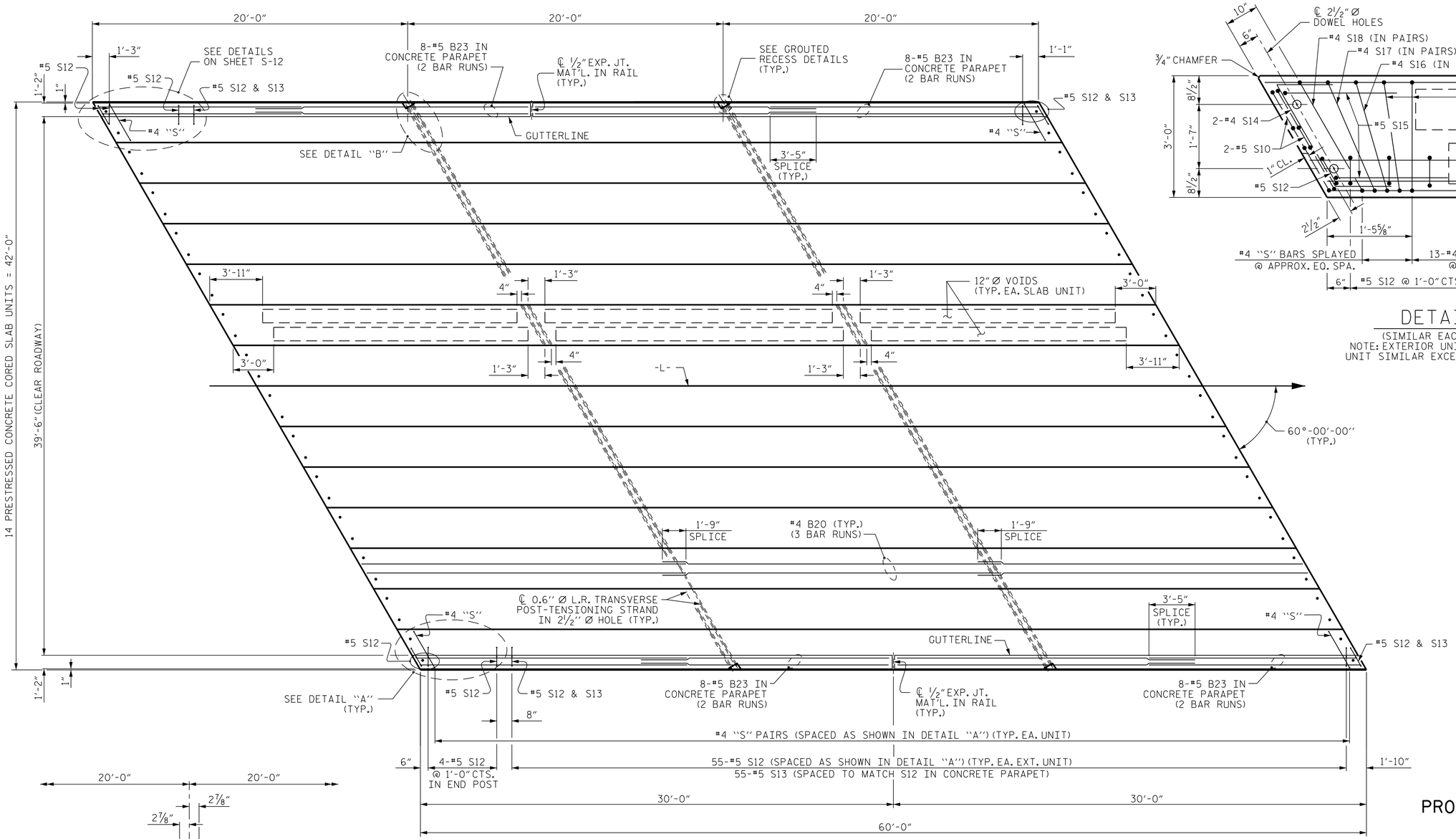

PLAN OF UNIT

SPAN A SHOWN, SPAN B SIMILAR BY ROTATIONS

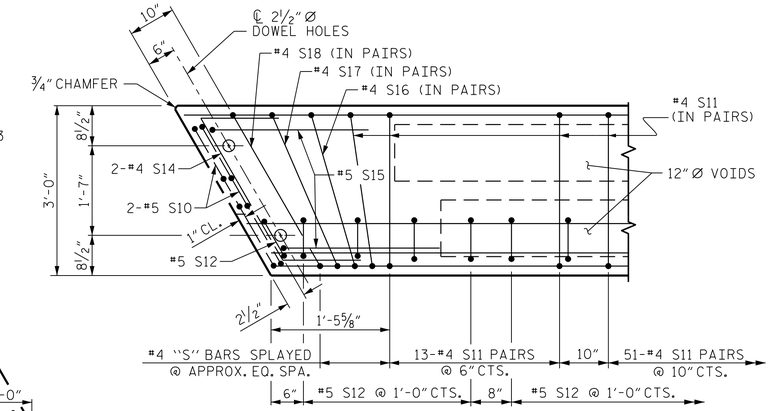

DETAIL "A"

(SIMILAR EACH END OF UNIT)
NOTE: EXTERIOR UNIT SHOWN - INTERIOR UNIT SIMILAR EXCEPT OMIT #5 S12 BARS.

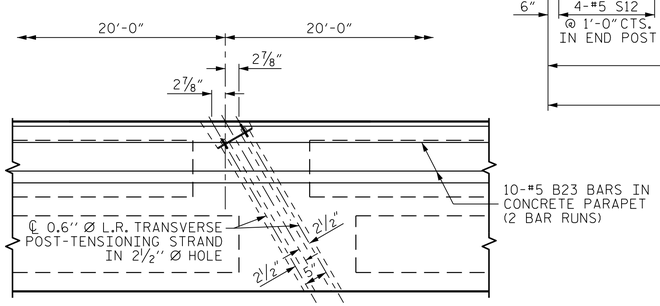

DETAIL "B"

#4 S11 BARS MAY BE SHIFTED AS NECESSARY TO MAINTAIN 1" CLEAR TO GROUTED RECESS AND 2 1/2" Ø TRANSVERSE POST-TENSIONING STRAND HOLES

PROJECT NO. B-4979
YADKIN COUNTY
STATION: 15+55.00 -L-

SHEET 2 OF 3

STATE OF NORTH CAROLINA
DEPARTMENT OF TRANSPORTATION
RALEIGH

PLAN OF 60' UNIT 39'-6" CLEAR ROADWAY 60° SKEW

SPANS A & B

DOCUMENT NOT CONSIDERED FINAL UNLESS ALL SIGNATURES COMPLETED

CDM Smith
CDM SMITH
5400 Glenwood Avenue, Suite 400
Raleigh, NC 27612-3228
NC COA No. F-1255

DRAWN BY :	VDK	DATE :	4/18
CHECKED BY :	THF	DATE :	4/18
DESIGN ENGINEER :	VDK	DATE :	4/18

DWG. No.

NORTH CAROLINA PROFESSIONAL SEAL 16301 ENGINEER TING HSIUNG FANG
Signature Ting Fang
DocuSigned by: 7B1A0D1BA80462...
10/2/2018

REVISIONS						SHEET NO.
NO.	BY:	DATE:	NO.	BY:	DATE:	S-06
1			3			TOTAL SHEETS
2			4			23

FILE: c:\pw_pll\length\d0949683\401_011_B4979_SMU_CS2_006.dgn
DATE: 9/28/2018 8:42:26 AM