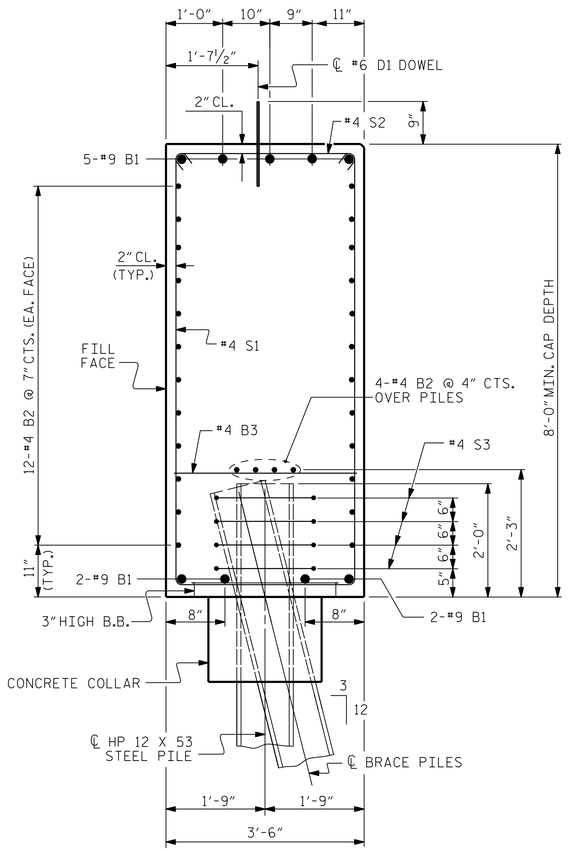

SECTION A-A

CONCRETE COLLAR NOT SHOWN FOR CLARITY.
SEE "CORROSION PROTECTION FOR STEEL PILES DETAIL"

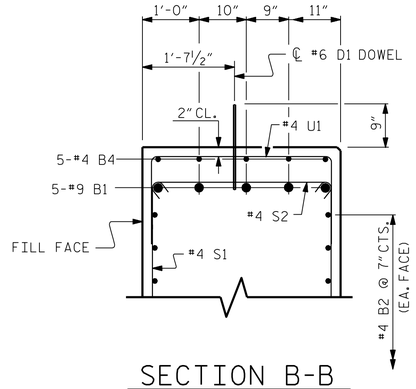

SECTION B-B

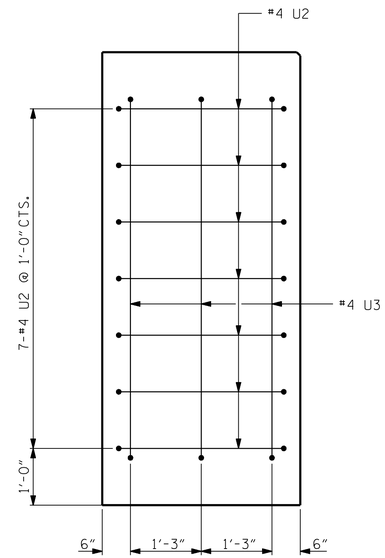

VIEW E-E

BAR TYPES

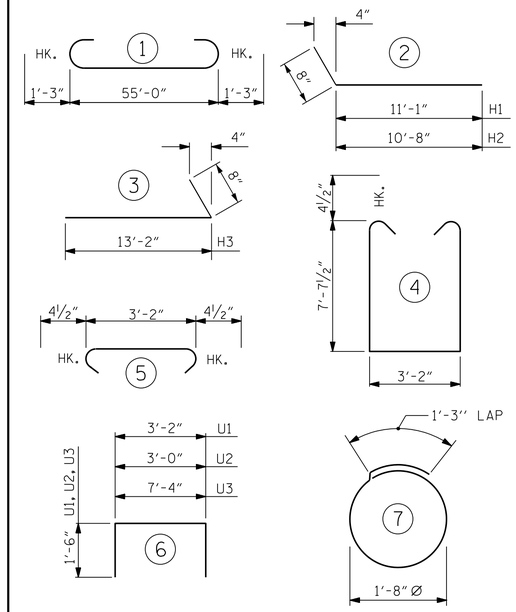

ALL BAR DIMENSIONS ARE OUT TO OUT.

BILL OF MATERIAL

END BENT 2

BAR	NO.	SIZE	TYPE	LENGTH	WEIGHT
B1	9	#9	1	57'-6"	1760
B2	56	#4	STR	28'-10"	1079
B3	14	#4	STR	2'-5"	23
B4	5	#4	STR	29'-6"	99
D1	28	#6	STR	1'-6"	63
H1	20	#4	2	11'-9"	157
H2	20	#4	2	11'-4"	151
H3	40	#4	3	13'-10"	370
K1	16	#4	STR	3'-8"	39
S1	93	#4	4	19'-4"	1201
S2	93	#4	5	3'-2"	243
S3	32	#4	7	6'-6"	139
U1	20	#4	6	6'-2"	82
U2	14	#4	6	6'-0"	56
U3	6	#4	6	10'-4"	41
V1	67	#4	STR	10'-5"	466

REINFORCING STEEL 5,969 LBS.

CLASS A CONCRETE BREAKDOWN

POUR #1	CAP, LOWER PART OF WINGS & COLLARS	67.4 C.Y.
POUR #2	UPPER PART OF WINGS	3.2 C.Y.
TOTAL CLASS A CONCRETE		70.6 C.Y.

HP 12 X 53 STEEL PILES
NO: 8 LIN. FT.= 140

PILE DRIVING EQUIPMENT SETUP FOR HP 12 X 53 STEEL PILES NO: 8

STEEL PILE POINTS NO: 8

NOTES

FOR DETAILS OF "TEMPORARY DRAINAGE AT END BENT", SEE SHEET S-16.

FOR PILE SPLICE DETAILS, SEE SHEET S-16.

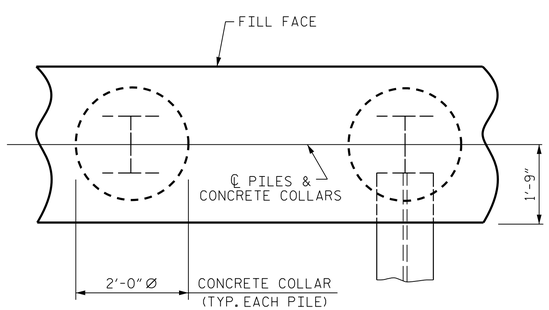

PLAN

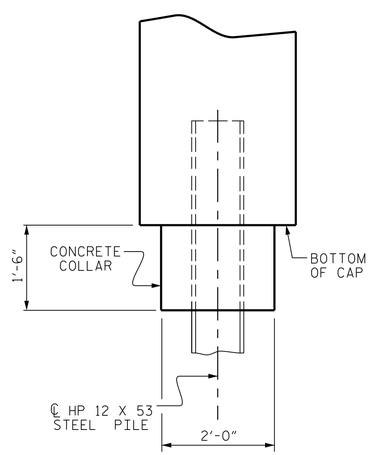

ELEVATION

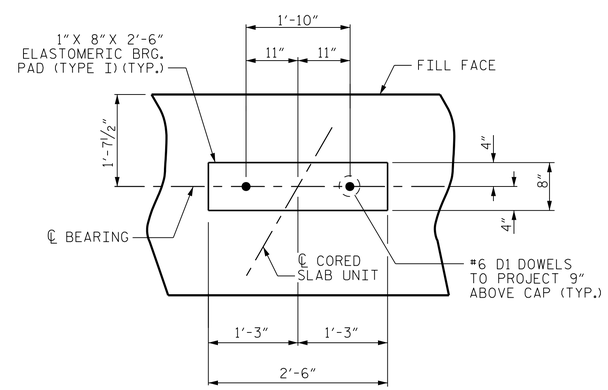

DETAIL "A"

CORROSION PROTECTION FOR STEEL PILES DETAIL

PROJECT NO. B-4979
YADKIN COUNTY
STATION: 15+55.00 -L-

SHEET 3 OF 3

DOCUMENT NOT CONSIDERED FINAL UNLESS ALL SIGNATURES COMPLETED

CDM Smith
CDM SMITH
5400 Glenwood Avenue, Suite 400
Raleigh, NC 27612-3228
NC COA No. F-1255

DRAWN BY : VDK DATE : 4/18
CHECKED BY : THF DATE : 4/18
DESIGN ENGINEER : VDK DATE : 4/18

DWG. No.

NORTH CAROLINA PROFESSIONAL SEAL 16301 ENGINEER TING-HSIUNG FANG
DocuSigned by: Ting Fang
60E43C9AEA60462...
10/2/2018

STATE OF NORTH CAROLINA
DEPARTMENT OF TRANSPORTATION
RALEIGH

SUBSTRUCTURE

END BENT 2 DETAILS

REVISIONS						SHEET NO.
NO.	BY:	DATE:	NO.	BY:	DATE:	S-21
1			3			TOTAL SHEETS
2			4			23

FILE: c:\pw_pll\langth\d0949583\401_041_B4979_SMU_E23_021.dgn
DATE: 9/25/018 8:44:18 AM